HAL
open science

Implantable Autonomous Stimulation Unit for FES

David Andreu, Jean-Denis Techer, Thierry Gil, David Guiraud

To cite this version:

David Andreu, Jean-Denis Techer, Thierry Gil, David Guiraud. Implantable Autonomous Stimulation Unit for FES. IFESS: International Functional Electrical Stimulation Society, Jul 2005, Montreal, Canada. pp.36-38. lirmm-00106066

HAL Id: lirmm-00106066

https://hal-lirmm.ccsd.cnrs.fr/lirmm-00106066v1

Submitted on 18 May 2016

HAL is a multi-disciplinary open access archive for the deposit and dissemination of scientific research documents, whether they are published or not. The documents may come from teaching and research institutions in France or abroad, or from public or private research centers.

L'archive ouverte pluridisciplinaire **HAL**, est destinée au dépôt et à la diffusion de documents scientifiques de niveau recherche, publiés ou non, émanant des établissements d'enseignement et de recherche français ou étrangers, des laboratoires publics ou privés.

Implantable Autonomous Stimulation Unit for FES

D. Andreu, J.D. Techer, T. Gil, D. Guiraud [1]

LIRMM-CNRS, Université Montpellier II, 161 rue Ada, 34392 Montpellier - France
[1] also INRIA researcher (DEMAR project)

{andreu, techer, gil, guiraud}@lirmm.fr

Abstract

We propose an implantable autonomous stimulation unit for Functional Electrical Stimulation (FES) of motor nerves, for spinal cord injured patients. Thus, we mainly focus on the prototype of such implanted device interfaced with neural structures by means of multipolar electrodes.

1. INTRODUCTION

Implanted FES devices are destined to restore motor functions in spinal cord injured (SCI) patients. They are organised, except [1], around a centralised system that is not able to perform complex stimulation schemes such as multipolar and multiphasic patterns, in order to achieve a more selective activation through spatial distribution of currents, and anodal blocking [2][3]. Thus, increasingly complex software and intricate hardware architectures are required to fit the constraints of these implanted devices. To overcome the limitations of centralized FES architectures, a new FES architecture is proposed according to the SENIS[1] (distributed neural electrical-stimulation) concept: the distribution of i) the stimulation unit with its control near its activator, i.e. its associated neural electrode ii) the implanted sensor with its embedded signal processing. We will deal only with stimulation.
Distributed FES is thus performed by means of distributed small implantable autonomous stimulation units which are driven by an external controller in charge of the coordination of stimulation sequences. Each small stimulation unit (called DSU, Distributed Stimulation Unit) is in charge of the execution of the stimulation pattern, applied to the muscle by means of a neural multipolar electrode. The SENIS architecture therefore relies on a set of DSU which communicate with an external controller, according to a given set of protocols (out of the scope of this paper).

This paper focuses on the DSU. We give some design principles as well as experimental results, obtained with our (hybrid) prototype, to show the performances of this new stimulation device.

2. METHODS

2.1. DSU Design

The architectural design underlying the SENIS concept leads to embed a complex system within each distributed FES unit. Each DSU, composed of analogue and digital parts, embeds for instance:

- An analogue sub-system, in charge of the generation of the electrical stimulus (Figure 1), which delivers precise calibrated stimulation pulses to specific multi-polar electrode [4][6].
- A micro-machine in charge of the execution of the stimulation sequence. It runs micro-programs using a dedicated reduced instruction set, and drives the analogue subsystem by calibrating the current pulse (waveform, amplitude, duration) to be applied to the electrode. Any error detection puts the stimulation unit in a safe mode regarding the physical system under control (no more stimulation generated while the DSU has not been rearmed).
- A protocol interpreter in charge of all the communication aspects, allowing to get the following services: download/upload of programs, start/stop/rearm the stimulation, configure the network parameters (of a DSU), get the status of a DSU, get an application acknowledgment, notify an event (error detection for instance), etc.

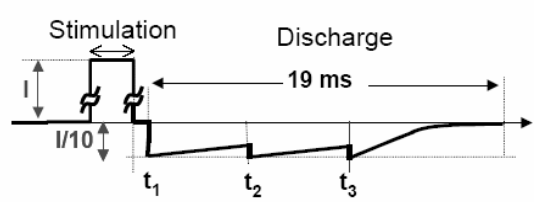

Figure 1: Stimulation and discharge phases

[1] Stimulation Electrique Neurale dIStribuée

The medical context involves very stringent constraints in terms of safety and performances. These criteria have been considered at every stage of the design, for all constitutive parts. On the digital part, micro-machine and protocol interpreter have been thus designed using Petri Nets formalism (PN).

2.2. DSU modeling and circuit synthesis

Due to the complexity of the DSU embedded system, we use Petri nets for the design, at a high level of abstraction, of the digital part. Its formalism (theoretical basis) and associated tools ease the description and verification (analysis) phases. The PN based model of the micro-machine is given figure 2. It corresponds to an "instruction interpreter engine", composed of 3 parts: (a) execution of MIT or MT instructions (cf. section 2.3), (b) execution of LOOP instruction, (c) safe state in which the micro-machine is if any error occurs. The micro-machine must then be externaly rearmed by the operator or an external controller (µ-program execution being once again allowed).

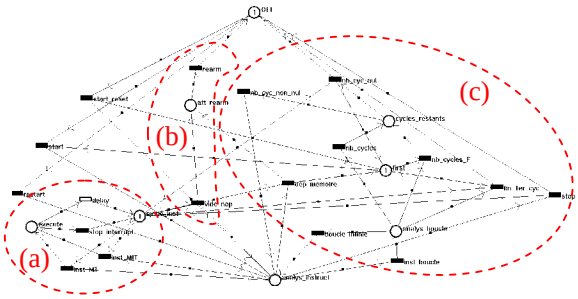

Figure 2 : Micro-machine PN based model

An analysis of this formal model allows to extract some proofs [5]. In order to ensure that the behavior of the programmable electronic device (FPGA) will be exactly that specified on the model (on a functional point of view), we must be able to directly program (construct) the programmable electronic device, from this model. So, we proposed an approach for the automatic code generation (in VHDL, this langage being dedicated to FPGA programming), allowing the hardware implementation to be directly performed from Petri net based models. We also developed the corresponding software environment, called HILECOP[2].

2.3. DSU Programming (µ-programs)

The DSU embeds a micro-machine in charge of the execution of a µ-program which represents the stimulation sequence to be performed. The instruction set is reduced to 3 instructions:

- MIT instruction; it is a stimulation instruction used to specify the calibration of the stimulation pulse in terms of selection of active cathodes and current distribution between them, and amplitude (20 µA grade shared between active cathodes, 5 mA max.) and duration (1 µs grade[3], 512 µs max.) of the pulse.
- MT instruction; it is a "neutral" instruction used to specify the duration (1 µs grade[3], 65536 µs max.) of the neutral phase (I=0) between two consecutive stimulation pulses. During this phase a safe discharge is done.
- LOOP instruction; it is dedicated to the repetition of the sequence of stimulation (i.e. sequence of MIT and/or MT instructions). The number of loops is given as a parameter of this instruction (endless loop is possible).

With this very reduced set of instructions, it is possible to program complex stimulation sequences. A first prototype has been developped and we have carried out some simulations and experimental validations.

3. RESULTS

Two kinds of results are exposed, some *in vitro* experiments (i.e. the stimulation device being not "connected" to a nerve, cf. section 3.1) and others performed *in vivo* on acute rabbit at the SMI Aalborg, in june 2004 (cf. section 3.2).

3.1 *In vitro* experiments

The experimental setup is shown on figure 3.

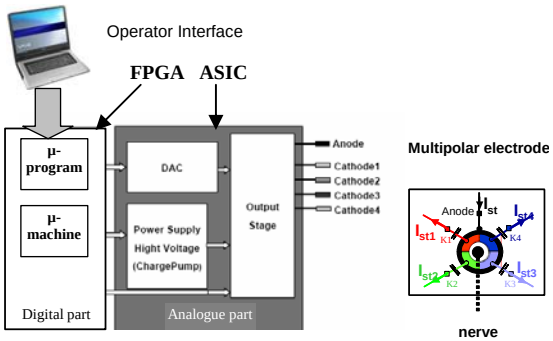

Figure 3: experimental setup

The operator can program the stimulation sequence and download it into the DSU. Then this micro-program can be started; the sequence is executed by the micro-machine till it ends or

[2] High LEvel hardware Component Programming

[3] for a 1 MHz clock.

it is stopped by the operator. An example of simulation sequence is given on figure 4.

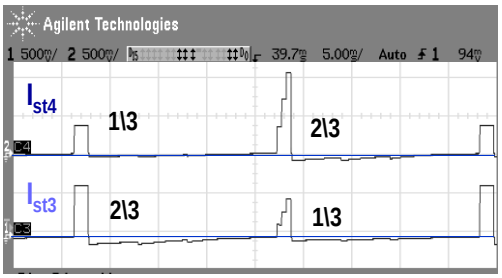

Figure 4: example of simple stimulation

The micro-program corresponding to this stimulator output trace is a sequence of 6 instructions:

- One MIT instruction; the first pulse is generated on cathodes 3 and 4 with a current distribution of respectively 2/3 (866µA), 1/3 (433µA). Its duration is 2 ms.
- One MT instruction; this neutral phase, during which is done the discharged, has a duration of 20 ms.
- Three consecutive MIT instructions, that compose the second pulse. This pulse, also generated on cathodes 3 and 4 with a current distribution of respectively 1/3 and 2/3, has so 3 phases of 1 ms duration each, with differents amplitudes (220µA, 433µA, 646µA for cathode 3, for instance).
- LOOP twice.

3.2 Experimental results on acute rabbit

The stimulation device has been used to study the neural fibers time recruitment and the corresponding muscle force response, of the rabbit's gastrocnemius muscle, when varying:

- the pulse train. Figure 5 shows the force response for a pulse each 35 ms (blue curve) and each 50 ms (red curve).

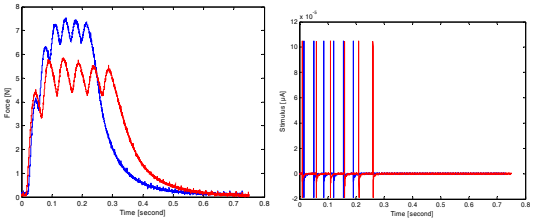

Figure 5: force responses (left) of the gastrocnemius muscle for different pulse train frequencies (right)

- the pulse amplitude. Figure 6 shows the force response (due to a different recruitment) when varying the pulse amplitude from 0 to 105 µA.

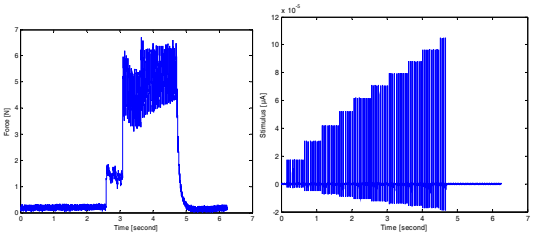

Figure 6: force response (left) of the gastrocnemius muscle for increasing pulse amplitude (left).

4. DISCUSSION AND CONCLUSIONS

We have shortly presented an hybrid prototype of a new implantable autonomous stimulation unit for FES; an application specific single chip (ASIC) is under way. To go further on stafety considerations, reference models are under study. Reference models will have to ensure that physical constraints are respected while performing the stimulation sequence. Those constraints are for examples: "the stimulus pulse width must not be greater than 1 ms" (constrainst on the stimulation phase), "the time interval between two stimuli must not be lower than 20 ms" (constrainst on the safe discharge phase). Such a real-time monitoring of the sequence execution will strengthen the safety of the distributed stimulation unit.

References

[1] G. E. Loeb, R. A. Peck, W. H. Moore, K. Hood, "BIONtm system for distributed neural prosthetic interfaces", Medical Engineering & Physics, vol. 23, pp 9-18, 2001.

[2] C. Veraart, W. M. Grill, J. T. Mortimer, "Selective Control of Muscle Activation with a Multipolar Nerve Cuff Electrode", IEEE Trans. On Biomedical Engineering, vol. 40, no 7, pp 640-653, July 1993.

[3] J. D. Sweeney, N. R. Crawford, T. A. Brandon, "Neuromuscular stimulation selectivity of multiple-contact nerve cuff electrode arrays", Medical and Biological Engineering and Computing, vol. 33, pp 418-425, 1995.

[4] J. D. Techer, G. Cathebras, S. Bernard, D. Guiraud, Y. Bertrand, "High Voltage Circuit Design for Medical Application", South European Test Seminar, Austria, february 2003.

[5] R. David, H. Alla, "Discrete, Continuous and Hybrid Petri Nets", Springer Verlag 2005.

[6] S. Bernard, J. D. Techer, G. Cathébras, Y. Bertrand and D. Guiraud. "Electrical Performances of a New Multipolar Micro-Stimulator". Annual Conference of the International FES Society, Montréal, Canada, July 2005.

Acknowledgements

Authors would like to thank Ken Yoshida, Hassan El Makssoud, Christine Azevedo and Michel Bénichou.