HAL
open science

Real Time 3D Visualization of DEM Combined with a Robust DCT Based Data-Hiding Method

Alexandre Martin, Gilles Gesquière, William Puech, Sébastien Thon

To cite this version:

Alexandre Martin, Gilles Gesquière, William Puech, Sébastien Thon. Real Time 3D Visualization of DEM Combined with a Robust DCT Based Data-Hiding Method. Electronic Imaging, Jan 2006, San Jose, CA, United States. pp.60600G, 10.1117/12.643265 . lirmm-00109684

HAL Id: lirmm-00109684

https://hal-lirmm.ccsd.cnrs.fr/lirmm-00109684v1

Submitted on 25 Oct 2006

HAL is a multi-disciplinary open access archive for the deposit and dissemination of scientific research documents, whether they are published or not. The documents may come from teaching and research institutions in France or abroad, or from public or private research centers.

L'archive ouverte pluridisciplinaire **HAL**, est destinée au dépôt et à la diffusion de documents scientifiques de niveau recherche, publiés ou non, émanant des établissements d'enseignement et de recherche français ou étrangers, des laboratoires publics ou privés.

Real Time 3D Visualization of DEM Combined with a Robust DCT Based Data-Hiding Method

A. Martin[a], G. Gesquiere[b], W. Puech[a] and S. Thon[b]

[a]Laboratory LIRMM, UMR CNRS 5506, University of Montpellier II
161, rue Ada, 34392 MONTPELLIER CEDEX 05, FRANCE
[b]Laboratory LSIS, UMR CNRS 6168, University of Marseille
IUT de Provence, rue R. Follereau, Route de Crau, 13200 ARLES CEDEX, FRANCE

ABSTRACT

Using aerial photography, satellite imagery, scanned maps and Digital Elevation Models implies to make storage and visualization strategy choices. To obtain a three dimensional visualization, we have to link these images called texture with the terrain geometry named Digital Elevation Model. These information are usually stored in three different files (One for the DEM, one for the texture and one for the geo-referenced coordinates). In this paper we propose to store these information in only one file. In order to solve this problem, we present a technique for color data hiding of images, based on DC components of the DCT-coefficients. In our application the images are the texture, and the elevation data are hidden in each block. This method mainly protects against JPEG compression and cropping.

Keywords: 3D Visualization, DEM, Data Hiding, Image Compression

1. INTRODUCTION

Geographical Information Systems (GIS) are important in a lot of domains. But using aerial photography, satellite imagery, scanned maps and Digital Elevation Models(DEM) implies to make storage and visualization strategy choices. These problems are inflated by a demand for increased accuracy that implies a finer resolution data. Sub meter satellite imagery, available to the general public, is now a reality. Images exceeding several gigabytes in size are common. To obtain a three dimensional visualization, we have to link these images called texture with the terrain geometry named Digital Elevation Model. This link is allowed by geo-referenced coordinates (longitude / latitude) which depend on projection system used. These information are usually stored in three different files (One for the DEM, one for the texture and one for the geo-referenced coordinates). We would like to store these information in only one file.

Our goal is to develop a client- server application for $3D$ visualization with real time constraints. In the server we store images with different compression levels. The level choice depends on the network connection.

Several techniques have been proposed in the literature to embed information in digital images.[1–3] These techniques provide various degrees of robustness. Data hiding applications include copyright protection, authentication, embedded and hidden information. Watermarking systems that are intended for copyright protection require a very high degree of robustness. Data hiding methods for embedding information require resistance against moderate level of modification due to routine image processing such as compression or cropping. Our color watermarking method belongs to this last group of data hiding systems. Furthermore, in our application, the length of embedded data can relatively be important. In each block of the image (32×32 pixels), we embed 2 bytes of information. The data correspond to elevation defined in meter. Coding with 2 bytes is sufficient for the elevation measured on earth.

The current paper presents a technique for color data hiding of images,[4] based on DC components of the DCT-coefficients[5–8] (Discrete Cosine Transform). In our application the images are the texture, and the elevation data are hidden in each block. This method mainly protects against JPEG compression and cropping.

The paper is organized as follows. In Section 2 we introduce the DEM and the 3D visualization. Section 3 describes our color data hiding method. In Section 4, we present and analyze some concluding results.

alexandre.martin@lirmm.fr, gilles.gesquiere@up.univ-mrs.fr, william.puech@lirmm.fr, sebastien.thon@up.univ-mrs.fr

2. REPRESENTATION OF A 3D TERRAIN

Terrain representation implies to use two kinds of data combined for the visualization:

- Height field data which correspond to the elevation of terrain (Figure 1.a). Theses points are used to generate the geometry and are connected by triangles (Figure 1.b).
- Different aerial photography can be computed in different spectrum (visible, infrared, etc). Theses ones are used to map $3D$ triangles previously computed (Figure 1.c).

2.1. Terrain elevation model (DEM)

To obtain a $3D$ visualization, the simplest solution consists in using a uniform discretization of the terrain, which gives a good precision but led to a very important number of triangles. For example, if we use a uniform grid, with a step of 50 meters in each direction (see Figure 1.a) the department of the Bouches du Rhône in France corresponds to more than ten millions triangles (Around 13000 km^2). This implies a very important memory cost for the $3D$ visualization for a wide area.

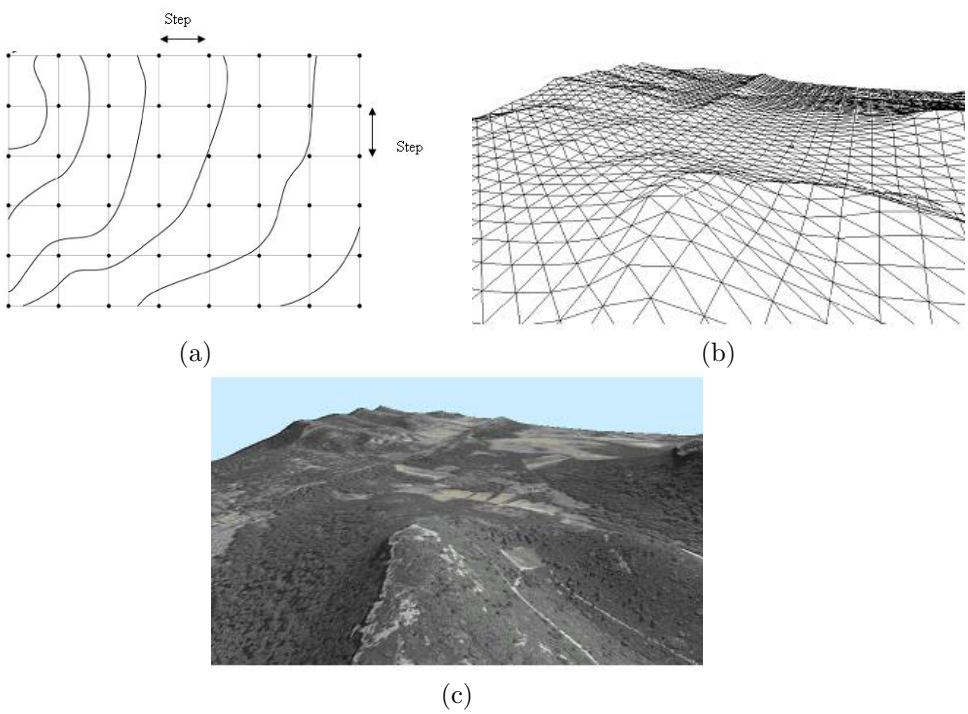

Figure 1. a) Visualization of the DEM Grid with isolevel, b) 3D triangulated surface of the DEM model, c) With aerial photography texture mapping.

Many methods were proposed to reduce the number of triangles provided by the uniform discretization, while preserving a good approximation of original surface.

One of the main approach consists in obtaining an irregular set of triangles (TIN : Triangulated Irregular Network). A great number of works were developed in order to create the TIN starting from a height field by using for example a Delaunay triangulation[9] . Hierarchical representations of these triangulations were proposed making it possible to introduce the concept of level of details[10] . It is thus possible to obtain various levels of surfaces with an accuracy which is similar to a uniform grid but with a lower number of triangles.

Another approach consists in breaking up the terrain in a set of nested regular grid of different level of details[11–13] . This approach has the advantage of allowing an optimal use of the capacities of the graphics

boards, and thus an increased speed of visualization. The main problem remains to connect the set of grids between them without cracks.

2.2. Textures mapping

Mapping aerial photography as textures on $3D$ DEM, induce important memory size. Indeed, the photography accuracy used is 50 cm per pixel, which leads to volumes of data of the order of Tera-bytes to visualize a department in France like the Bouches du Rhône for example. It is thus necessary to think about strategies of compression, storage and optimized reading to reach a real time visualization of data.

There are many methods of images compressions, most powerful in term of compression ratio if we are allowed to degrade the image quality, like JPEG and JPEG 2000. Several client- server architectures have been proposed to store important number of data often used on several stations[14] . In order to visualize these data quickly, the strategies of cutting a set of nested regular grid[15] and with different levels of details are used[16] .

2.3. The proposed coupled storage of DEM and Texture

In this paper we want to visualize in a client large datasets (DEM, Aerial images). These data are stored on a distant server. Data are sent in small packets to reduce connection latency. These information are usually stored in three different files (One for the DEM, one for the texture and one for the geo-referenced coordinates). We would like to store these information in only one file. We propose to embed the DEM and geo-referenced coordinates in the aerial photography. An altitude will be stored in a block of pixels of an image. We choose to store one altitude in a 32×32 pixel packet as explained in Section 3.

3. DCT-BASED DATA-HIDING

The usual way to be robust to JPEG compression is to work in the same frequential domain, the DCT one. Some well-known methods work in this way.

3.1. Classic DCT-based data-hiding methods

Data-hiding in the DC components is based on the knowledge of the influence of the DC component over the spatial domain: it is directly related to the mean of the intensity of the pixels. A secret bit is embedded in each DC component by substitution of the less significant bit (LSB):

$$F'_{DH}(u,v) = F'(u,v) - F'(u,v)\%2 + b_t, \tag{1}$$

where $F'(u,v)$ is a DCT coefficient after quantization,[17] $x\%y$ is the rest of the integer division of x by y, and b_t, the bit to embed.

This method presents two advantages: its simplicity and its robustness. The mean intensity of a block is a global indicator and resists well pixel modifications. On the opposite, this data-hiding method has a low capacity since only one bit is embedded in each 8x8 blocks, the secret information cannot exceeded 0.19% of the original image size.

The Jpeg/Jsteg method,[7] extends the idea of the previous one to all components of absolute value greater than 1. One secret bit is embedded in each coefficient with respect to this requirement. The restriction over the coefficients aims at preserving the null coefficients and, thus, a good compression rate. We can considerate that this method is content-based. Indeed, a homogeneous block contains few non-null coefficients and will embed few secret bits whereas heterogeneous one contains more non-null coefficients and will embed more information. This data-hiding agrees with an obvious Human Vision System (HVS) principle: modifications are less visible in heterogeneous regions than in homogeneous ones. Capacity, robustness and invisibility of data-hiding methods are very related and opposed. So, the improvement of the capacity has negative incidence at least on the robustness. The secret information is more sensible to local modifications. Nevertheless the real negative point is the unknown capacity. It can vary between 0% and 12,5% of the original image size. As it is designed to be applied on real image, the capacity remains often better than for the previous method. The following methods attempt to ensure a higher minimum capacity.

A data-hiding by modification of the quantization matrix has been proposed by.[8] Depending on the quality factor selected for the JPEG compression, a quantized DCT coefficient variation can lead to important changes in the image. This data-hiding method proposes to choose coefficients which will not be quantized and could embed secret bit without degrading the image too much. The capacity is known in advance and depends on the selected number of non quantized coefficients. The original method propose to select 26 coefficients corresponding to average frequencies over the 64 of a block and to embed two secret bits in each by substitution of the two LSBs. So the fixed capacity is 10.16% of the original image size. The quantized matrix is present in the JPEG file in order to rebuild the information. Consequently, it is easy to detect the presence of hidden data. So, the invisibility provided by this method is not very satisfactory.

3.2. The proposed DCT-based data-hiding method

For this application we propose to use data-hiding method in the DC components of a color image JPEG (see figure 2). We embed the information of the Y luminance component of the color image. The method consists of dividing this component into square (of 8×8 pixels) blocks and applying the DCT to each block. Each altitude is coded on 2 bytes, then we need 16 blocks to embed the information of an altitude of the DEM. So we have chosen to use 4×4 blocks of pixels to embed an altitude. Consequently each block of 32×32 pixels of the original image will be synchronized with an altitude coded on 2 bytes. Then if we crop the image with a multiple of 32 pixels we are still able to extract the embedded message. With this proposed method the texture is in color and we can compress the image with a chosen quality factor. The embedded message is extracted before the inverse quantization of JPEG.

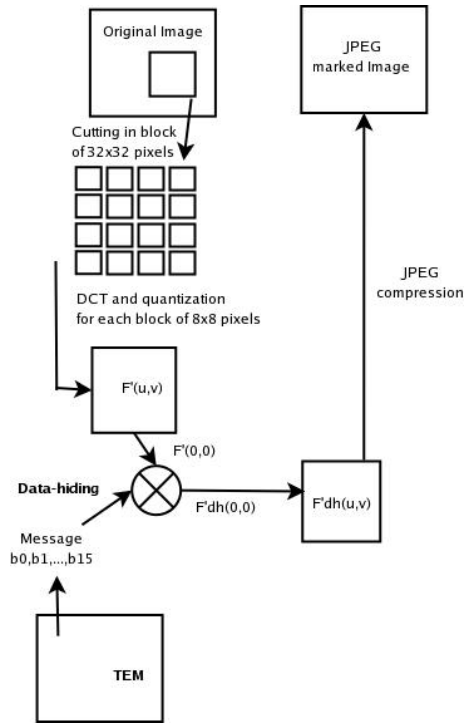

Figure 2. Data-hiding method for coding the altitude in the JPEG texture.

4. RESULTS

In this Section we apply our data hiding method on the image represented on figure 3.a. The message to embed is the altitudes of the DEM which correspond to this texture (Figures 3.b and 3.c). The original image size of the Figure 3.a is 800×800 pixels (1876 kilobytes) and the size of the data to embed is 25 altitudes of 2 bytes (1250 bytes).

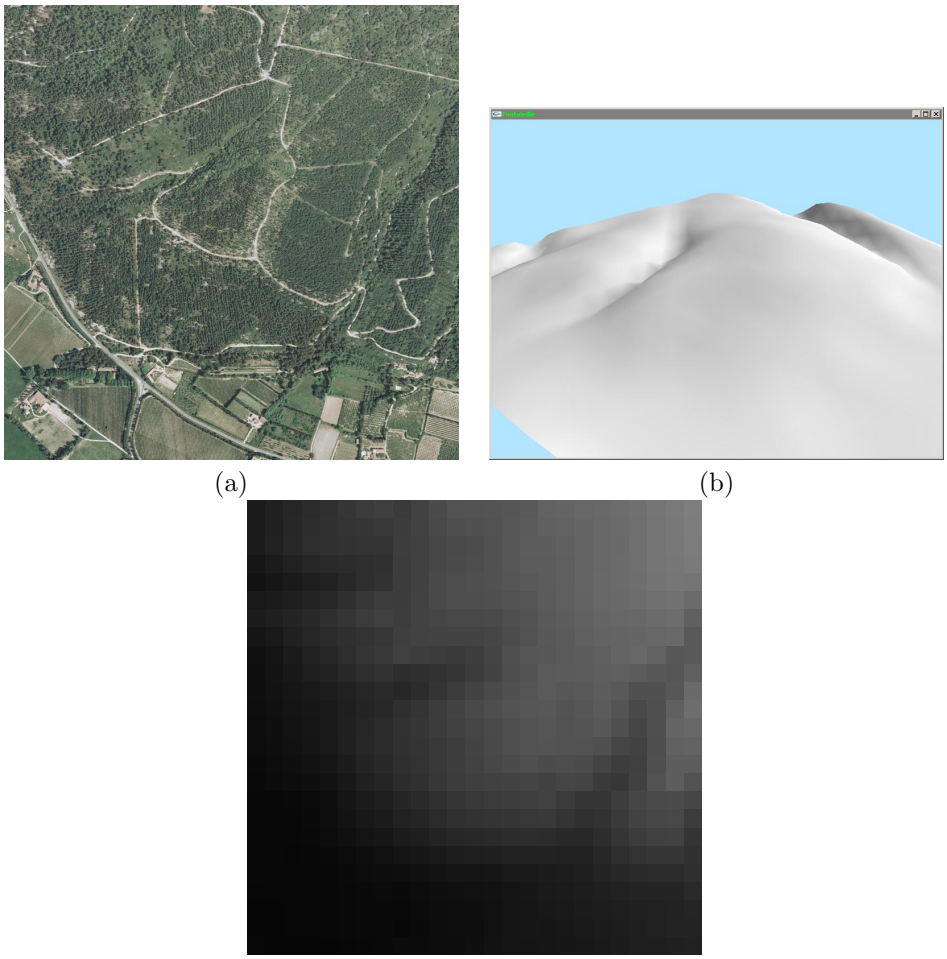

(a) (b) (c)

Figure 3. a) Original image of texture, b) DEM, c) Map of the altitude.

We have then embedded the message with four different quality factors (QF) of JPEG. The result of the marked images are illustrated Figures 4.a, b and c. With a $QF = 100\%$ the compression rate is $\tau = 2.65$, Table 1 and a 3D visualization from this image is illustrated Figure 4.d. The quality of the marked image is good, the $PSNR = 38\ dB$. With a $QF = 50\%$, the result is illustrated Figure 4.b and e. The compression rate is $\tau = 17.01$, Table 1. With a $QF = 25\%$, the result is illustrated Figure 4.c and f. The compression rate is $\tau = 25.7$, Table 1. The quality of the marked image is less than 30 dB ($PSNR = 38\ dB$), but the 3D visualization is still good. Better quality images can be found at *http://g.gesquiere.free.fr/recherche/SPIE06*. The Figures 4.g, h and i illustrate the difference between the compressed image and the compressed marked one for the $QF = 100\%$, 50% and 25%. From $QF = 50\%$ we can see the blocks where we have changed the LSB value of the DC in order to embed our message.

If you crop a part of a marked image it is still possible to have a partial 3D visualization with the same quality. The constraint, in order to be synchronized with the embedded message, is just to crop the image in

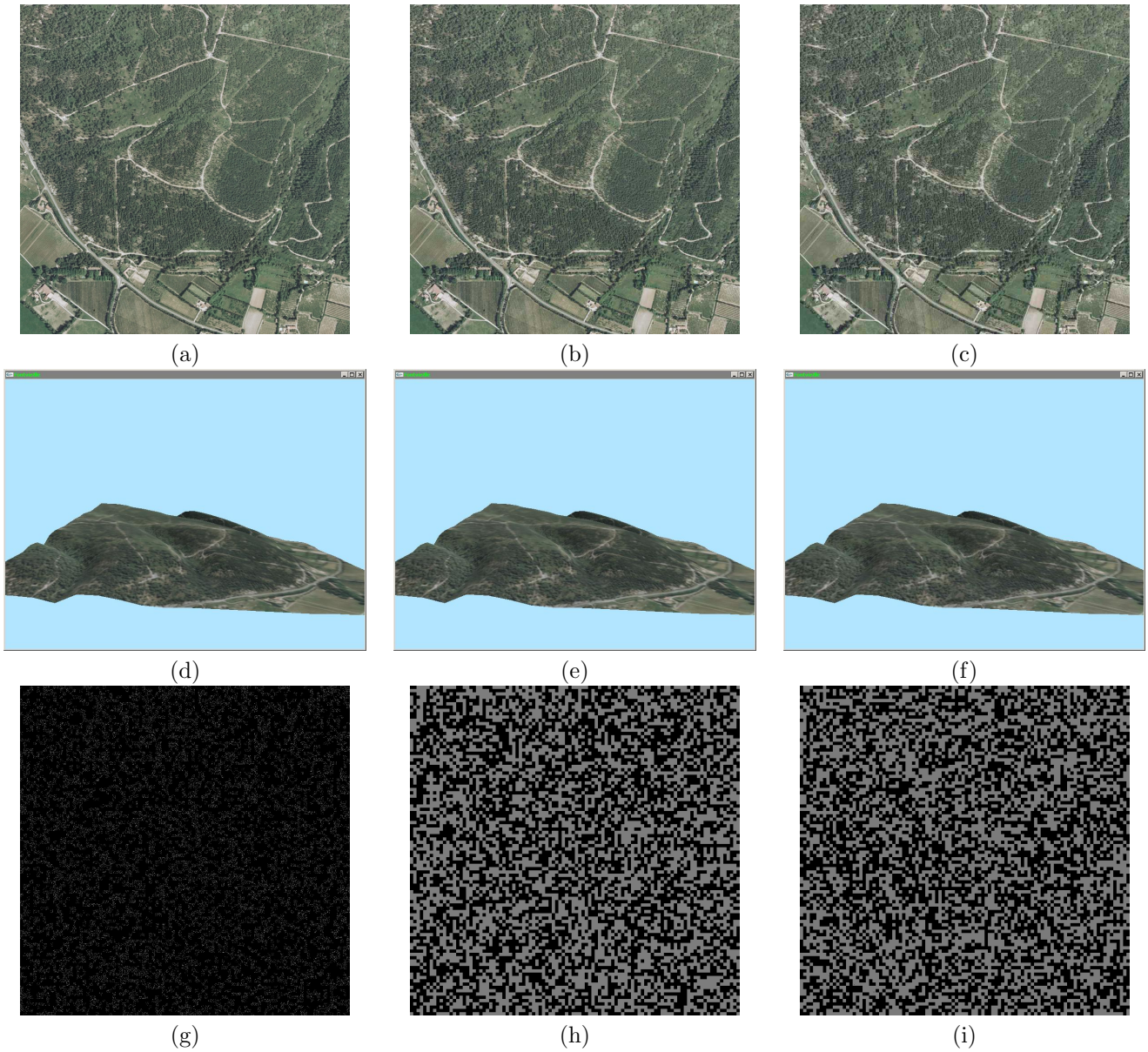

Figure 4. a) Marked image, QF = 100%, d) 3D visualization from the marked image, b) and e) Marked image and 3D visualization with QF = 50%, c) and f) Marked image and 3D visualization with QF = 25%, g), h) and i) Difference between the compressed image and the compressed marked one.

QF (%) of JPEG	Image size (kbytes)	PSNR (dB)
100	709	38
75	166	30
50	110	29
25	73	26

Table 1. Quality and compression rate in function of the QF of JPEG.

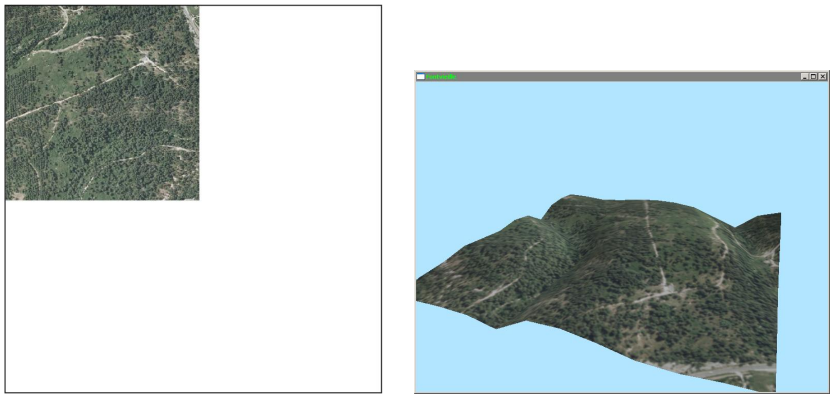

(a) (b)

Figure 5. a) Cropping of the marked image, b) DEM.

block of multiple of 32×32 pixels. An example of cropping is illustrated Figure 5.a and the partial visualization is showed Figure 5.b.

5. CONCLUSION

In this paper we have presented a new data hiding method in order to embed the digital elevation model in the aerial photography. This method is robust to JPEG compression. In the server, are stored different representations of these images with different compression levels. It is then possible to transmit the data according to the flow on the network. The possibility to crop JPEG images which contain the DEM implies that we only send the interesting part of the image. Our software lets the user visualizing the received image in $2D$. A $3D$ visualization can also be proposed with information contained in the images.

In our future works, we would like to use a multilevel method which would enable us to store various levels of DEM.

REFERENCES

1. F. Deguillaume, S. Voloshynovskiy, and T. Pun, "Hybrid robust watermarking resistant against copy attack," in *EUSIPCO'02, Toulouse, France*, 2002.
2. F. Hartung and M. Kutter, "Multimedia watermarking techniques," in *IEEE Proceeding 87*, pp. 1079–1107, 1999.
3. G. Voyatzis and I. Pitas, "The use of watermarks in the protection of digital multimedia products," in *IEEE Proceeding 87*, pp. 1197–1207, 1999.
4. G. Chareyron and A. Tremeau, "Watermarking of color images based on a multi-layer process," in *CGIV'02, Poitiers, France*, pp. 77–80, 2002.
5. A. Bors and I. Pitas, "Image watermarking using block site selection and DCT domain constraints," *Optics Express* **3**(12), pp. 512–522, 1998.
6. E. Koch and J. Zhao, "Towards robust and hidden image copyright labeling," in *IEEE Workshop on Nonlinear Signal and Image Processing, Neos Marmaras, Greece*, pp. 452–455, 1995.
7. C.-T. Hsu and J.-L. Wu, "Hidden digital watermarks in images," *IEEE Transaction on Image Processing* **8**, pp. 58–68, 1999.
8. C.-C. Chang, T.-S. Chen, and L.-Z. Chung, "A Steganographic Method Based upon JPEG and quantization table modification," *Information Sciences, Elsevier* **141**, pp. 123–138, 2002.
9. R. J. Fowler and J. J. Little, "Automatic extraction of irregular network digital terrain models," in *SIGGRAPH '79: Proceedings of the 6th annual conference on Computer graphics and interactive techniques*, pp. 199–207, ACM Press, (New York, NY, USA), 1979.

10. L. D. Floriani and E. Puppo, "Hierarchical triangulation for multiresolution surface description," *ACM Trans. Graph.* **14**(4), pp. 363–411, 1995.
11. L. Bishop, D. Eberly, T. Whitted, M. Finch, and M. Shantz, "Designing a pc game engine," *IEEE Comput. Graph. Appl.* **18**(1), pp. 46–53, 1998.
12. D. Wagner, "Terrain geomorphing in the vertex shader," in *In ShaderX2: Shader Programming Tips and Tricks with DirectX 9*, Wordware Publishing, 2004.
13. F. Losasso and H. Hoppe, "Geometry clipmaps: terrain rendering using nested regular grids," *ACM Trans. Graph.* **23**(3), pp. 769–776, 2004.
14. P. Baumann, P. Furtado, R. Ritsch, and N. Widmann, "Geo/environmental and medical data management in the rasdaman system," in *VLDB'97, Proceedings of 23rd International Conference on Very Large Data Bases, August 25-29, 1997, Athens, Greece*, M. Jarke, M. J. Carey, K. R. Dittrich, F. H. Lochovsky, P. Loucopoulos, and M. A. Jeusfeld, eds., pp. 548–552, Morgan Kaufmann, 1997.
15. J. Yu and D. J. DeWitt, "Processing satellite images on tertiary storage: A study of the impact of tile size on performance," in *5 th NASA Goddard Conference on Mass Storage Systems and Technologies*, 1996.
16. P. Hansen, "Opengl texture-mapping with very large datasets and multi-resolution tiles," in *SIGGRAPH '99: ACM SIGGRAPH 99 Conference abstracts and applications*, p. 262, ACM Press, (New York, NY, USA), 1999.
17. W. Pennebaker and J. Mitchell, "JPEG: Still Image Data Compression Standard," *Van Nostrand Reinhold* **45**, 1993.